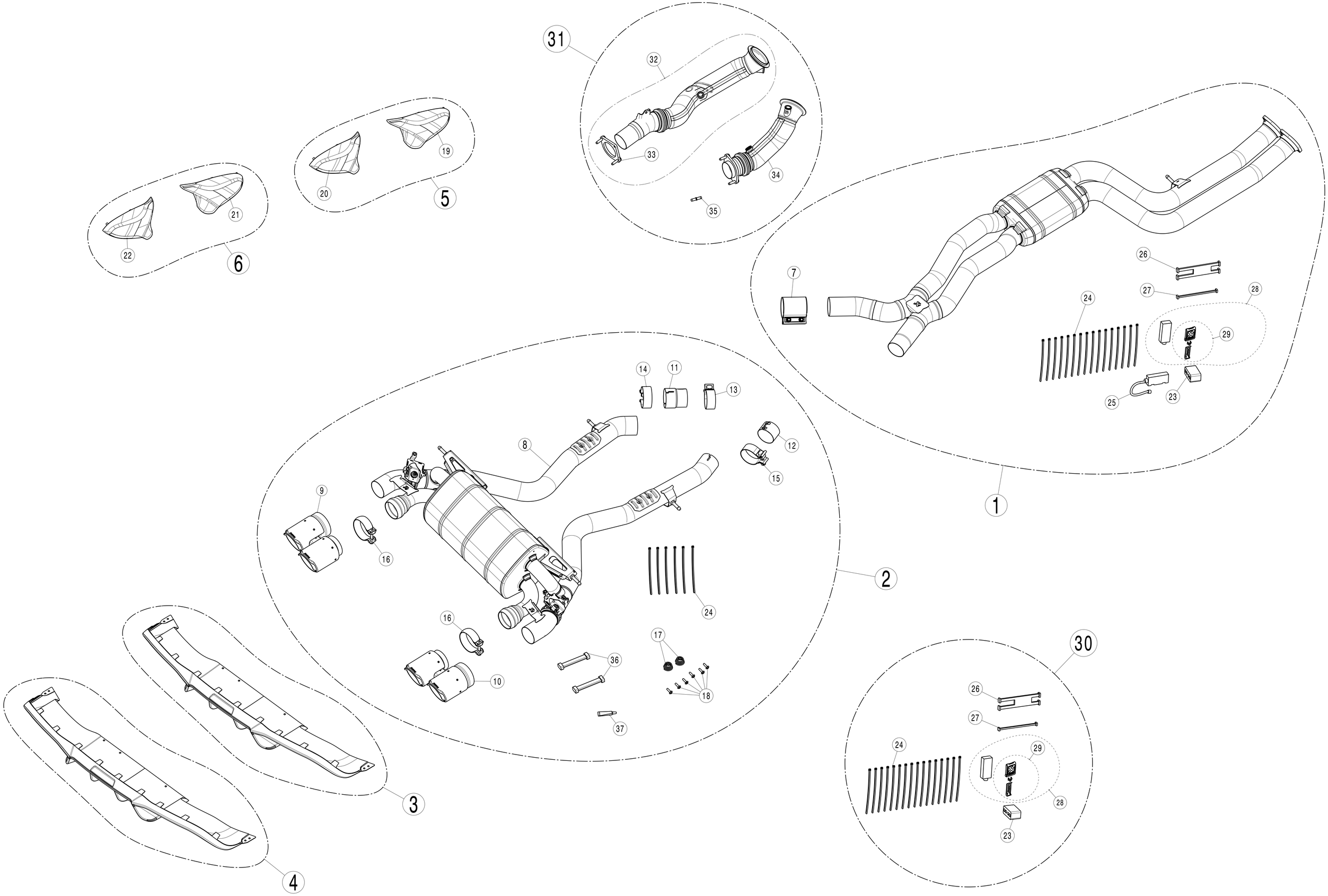
31
32
33
34
35
19
20
5
21
22
6
7
26
27
28
24
29
25
23
1
14
11
13
8
12
15
9
16
2
24
16
17
36
10
18
37
30
26
27
24
29
28
23
3
4

No.	SalesCode	Description	Qty.
1	E-BM/T/5	evolution Llink pipe set TI	1
2	S-BM/T/3H	slip on system	1
3	DI-BM/CA/3/M	rear CA diffuser Matt	1
4	DI-BM/CA/3/G	rear CA diffuser Glossy	1
5	WM-BM/CA/2/M	CA Wing Mirror Cover Set Matte	1
6	WM-BM/CA/2/G	CA Wing Mirror Cover High Gloss Set	1
7	P-R151	clamp SS	1
8	M-BM/T/12H	muffler	1
9	TP-CT/50/L	tail pipe right CA	1
10	TP-CT/50/R	tail pipe right CA	1
11	P-CP030	adapter TI	1
12	P-HF1186	connecting pipe TI	1
13	P-R68	clamp SS	1
14	P-R69	clamp SS	1
15	P-R148	clamp SS	1
16	P-R142	clamp SS	2
17	P-HF1453	lever SS	2
18	P-FB97	bolt	6
19	WM-BM/CA/2/M/R	Wing Mirror Cover CA Matte Right	1
20	WM-BM/CA/2/M/L	Wing Mirror Cover CA Matte Left	1
21	WM-BM/CA/2/G/R	Wing Mirror Cover CA High Gloss Right	1
22	WM-BM/CA/2/G/L	Wing Mirror Cover CA High Gloss Left	1
23	P-HF1178	modul Control kit	1
24	P-VEZ2	tie wrap	36
25	P-HF936	VTS CAN Sniffer	1
26	P-HF1192	cable/wire harness	1
27	P-HF1109	cable/wire harness	1
28	P-HF841-A5	fitting kit Keyfob+Receiver Control kit	1
29	P-HF841/2	sound controller UNI #2	1
30	P-HF1177	akrapovic sound kit opt.	1
31	DP-BM/SS/3	downpipe SS optional	1
32	DP-BM/SS/3/L	downpipe L SS	1
33	P-F66	adapter	1
34	DP-BM/SS/3/R	downpipe R SS	1
35	P-FB166	shaft SS	1
36	P-HF1140	cable/wire harness	2
37	P-LT1	screw sealant	1