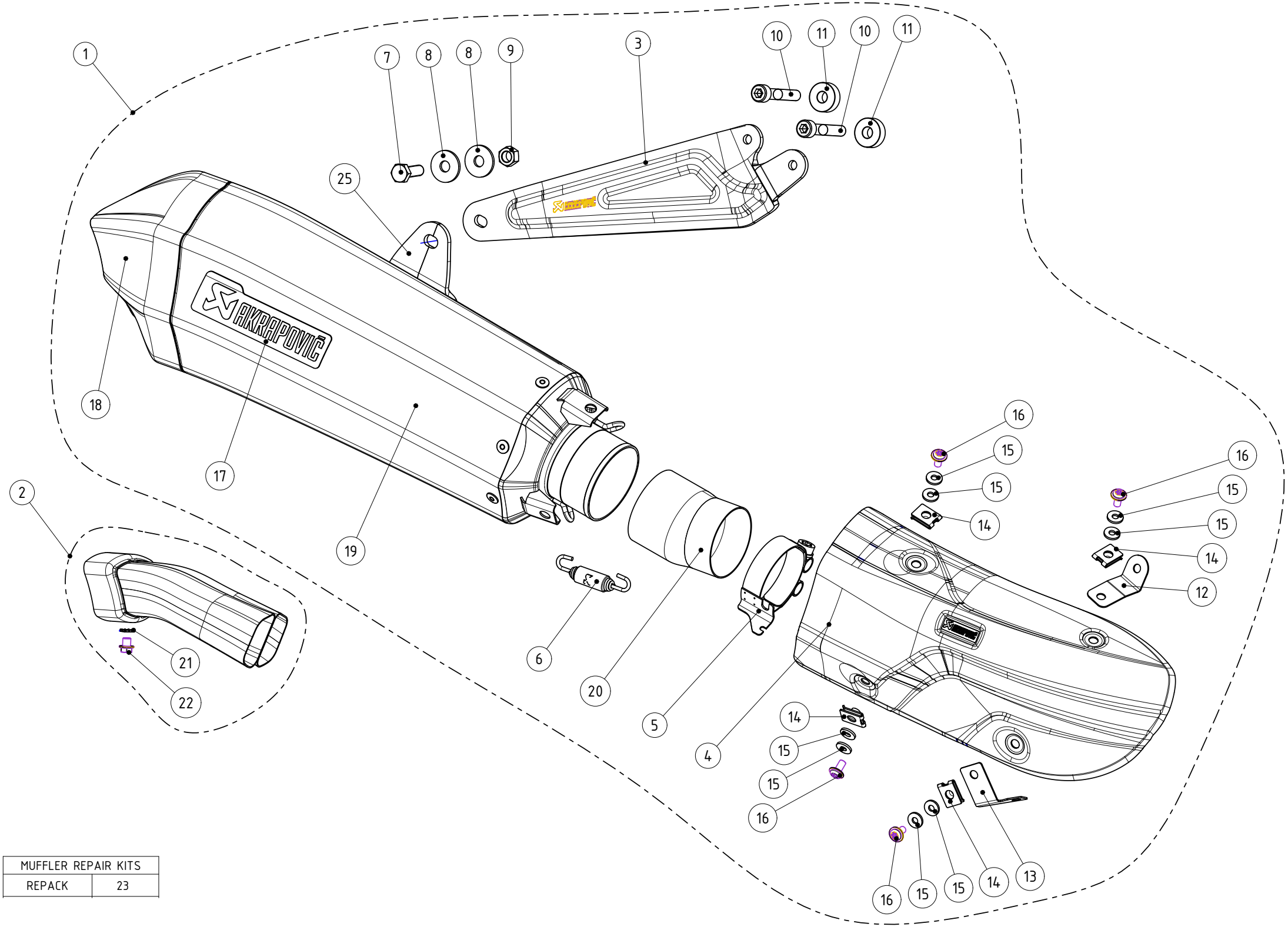

MUFFLER REPAIR KITS	
REPACK	23

No.	SalesCode	Description	Qty.
2	V-TUV169Y	noise insert optional	1
21	P-DR18	washer SS	1
22	P-FB56	bolt	1